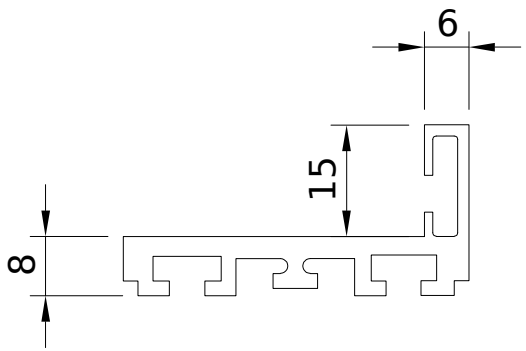

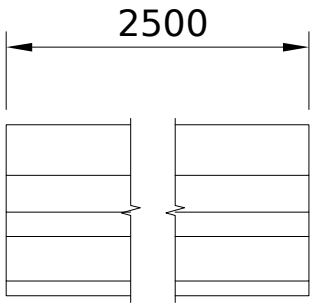

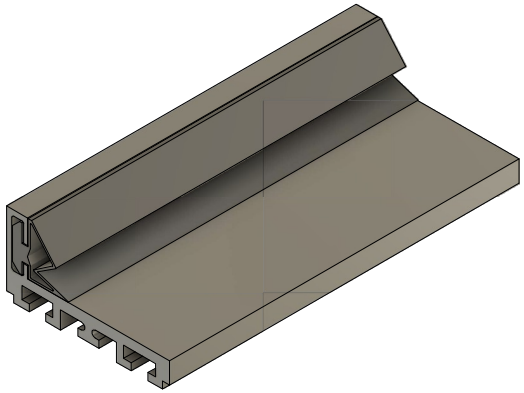

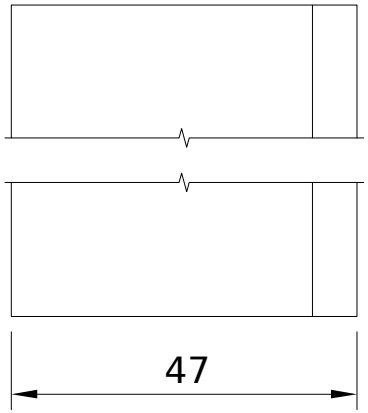

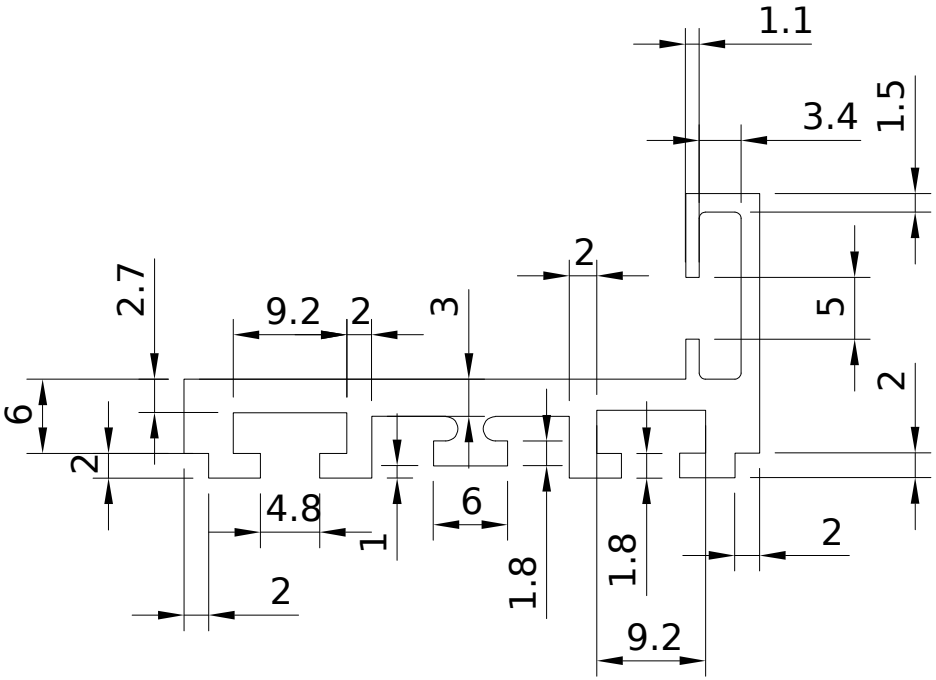

FDM-63

av24.su